F810

Kelvin Probe 100 mil Plug-in

Centers (mm/mil)	2,54 / 100
Current (Circular)	3,0 A
Current (Internal)	0,8 A
Temperature	-20°C...+80°C

Spring Force (cN ±20%)

	Preload	Nominal
Total		170
Total		230
Internal Cont.	10	70
Internal Cont.	25	90
Circular Cont.	40	100
Circular Cont.	40	140

Travel (mm)

	Nominal	Maximum
Internal Cont.	2,8	4,0
Circular Cont.	2,3	3,5

Materials and Plating

Internal Cont.	Steel, longtime gold plated
Circular Cont.	BeCu, gold plated
Barrel	Bronze, silver plated
Spring Internal Cont.	Music Wire, silver plated
Spring Circular Cont.	Music Wire, silver plated
Receptacle	Bronze, gold plated

Accessories

Insertion tool receptacle	FEWZ-772E0

Drill Size (mm)

H810...	2,08 - 2,09

Projection Height (mm)

H810... with F810	H + 0,3

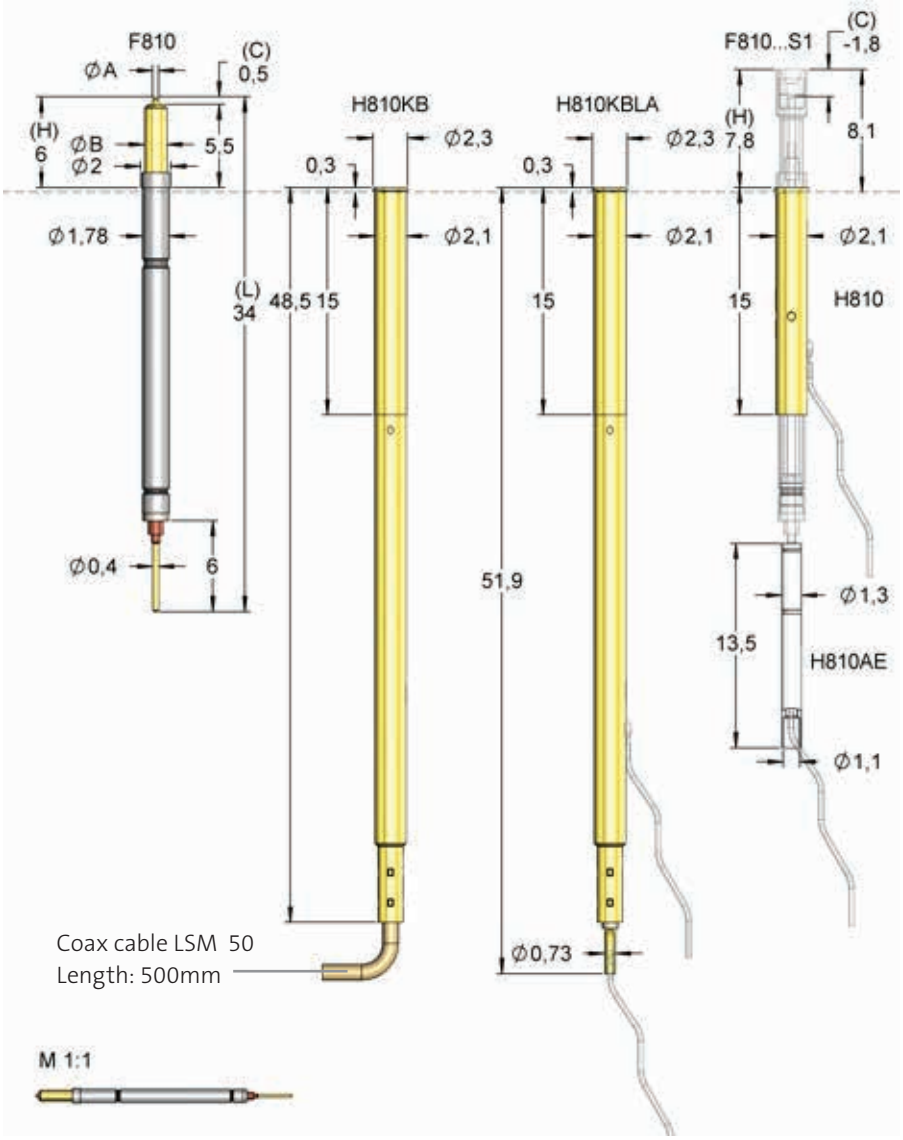

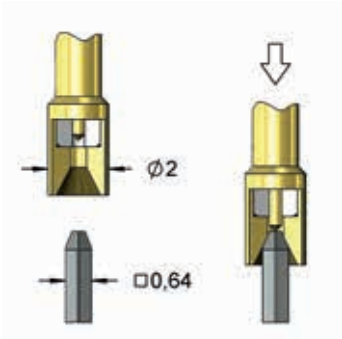

Special version for contacting wire wrap posts: Order code F81001S040L230S1

Order Code	Sense Pin	Tip Style	Ø A	Ø B	C	H	L	Version
F81001S040L170		01	0,40	1,50	0,50	6,00	34,00	-
F81001S040L230S1		01	0,40	2,00	-1,20	7,80	35,80	S1
F81006B080G230S1		06	0,80	2,00	-1,20	7,80	35,80	S1
F81016S040L170		16	0,40	1,50	0,50	6,00	34,00	-
F81016S040L230S1		16	0,40	2,00	-1,80	7,80	35,80	S1

Edition 10/2019. All rights reserved. Not all combinations are available. Further versions can be found at **www.feinmetall.com**